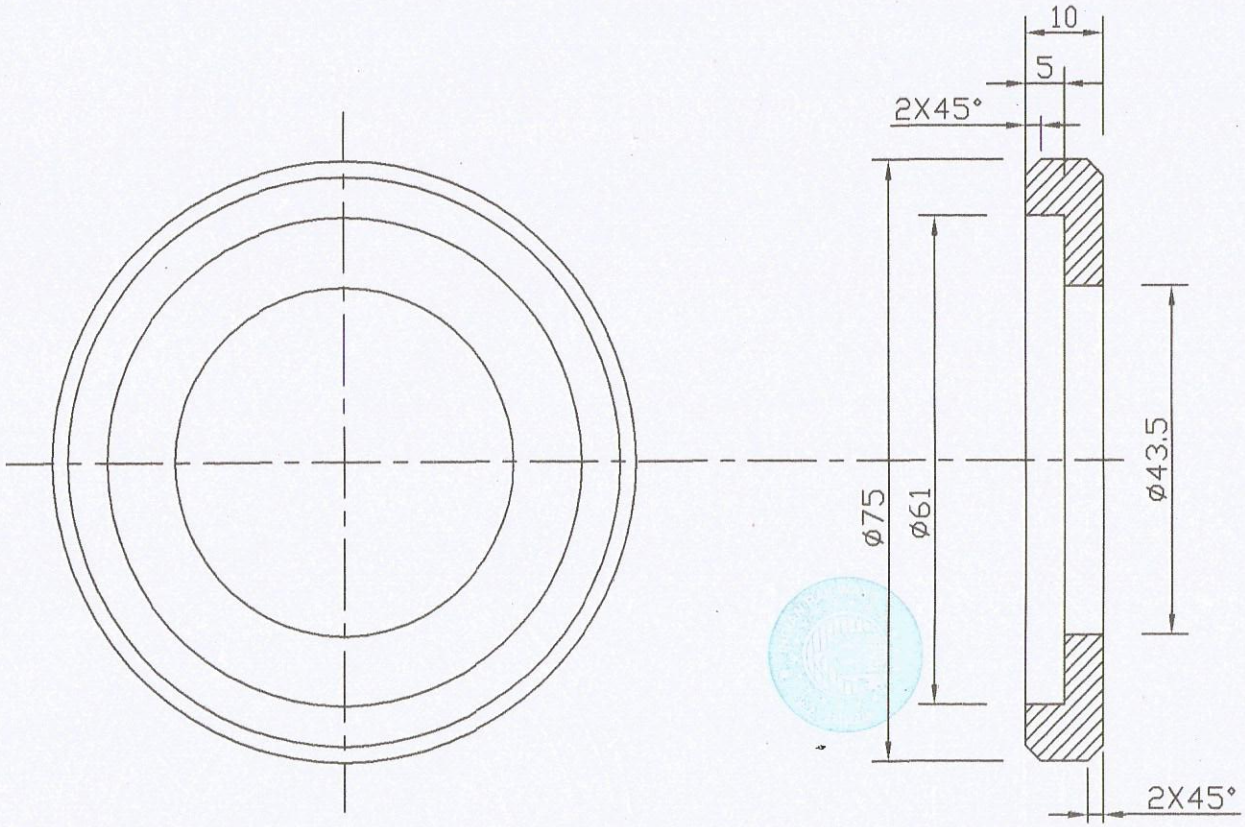

4. TOLERANCES MAY BE INDICATED INDIVIDUALLY UPON SUITABILITY OF FITMENTS.
3. MATERIAL COMPOSITION AND OTHER DETAILS REFER TO RDSO'S SPECIFICATION No.TM/HM/6/398
2. ALL SHARP CORNERS TO BE CHAMFERED.
1. ALL DIMENSIONS ARE IN MILLIMETRES.

NOTES	SPECIFICATION	SCALE	ALT	DESCRIPTION	AUTHY
	RDSO SPECIFICATION NO TM/HM/6/398	:1			

R. D. S. O.

CAP WASHER OF CSM,DUO AND WST

(PART No.2E32.05)
(PROVISIONAL)

CANC./SUPED
REVED.

DRG. No. RDSO/TM/16/17

DR. BY: S.DAYAL	PLT BY: SHALINI	APPROVED BY:	
CH. BY: A RAI	COM BY: A RAI	ARE/TM(HM)	DTM-III 11.6.18